F-Series

F360, F362, F393

Door Type: Metal, Flat or Beveled

Door Thickness: 1⅝” (41mm)–2” (51mm)

Faceplate: Square Corner, 1” (25mm) wide

Backsets: F770-C, 2⅜” (60mm) | F770-D, 2¾” (70mm)

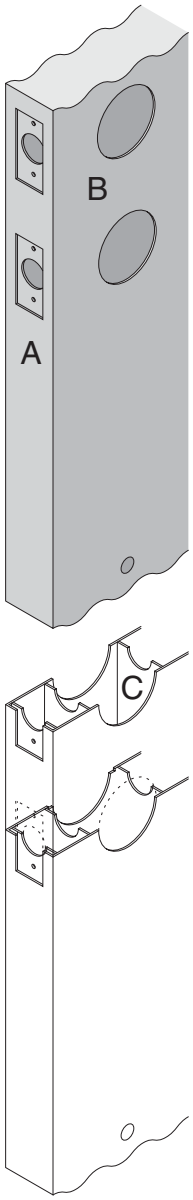

For metal door installations suitable reinforcement is required to support latch in center of door and to prevent lateral movement

Prepare edge of door for F/FA360 and F/FA362. Not required for F393

Bottom hole for reference only. Do not drill until product installation

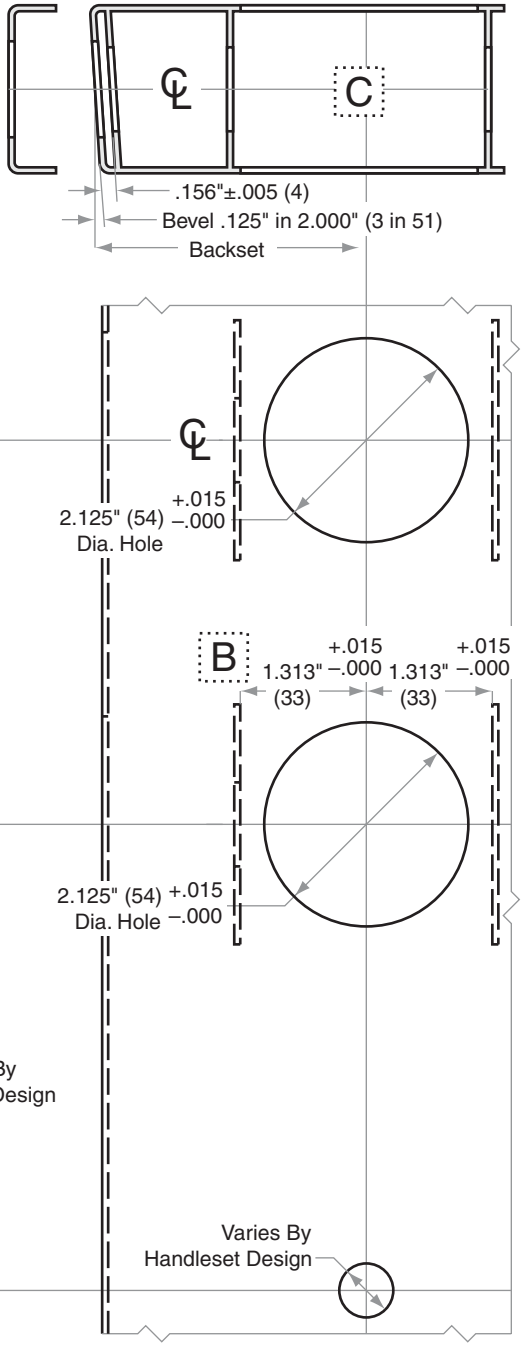

Dimensions shown in parentheses () are in millimeters

Job: _____

Date: _____

Door Thickness: _____

Remarks: _____

TEMPLATE
F770