# ND-Series Levers

## ND170

| | |
|---|---|
| **Door Type:** | Metal |
| **Door Thickness:** | Various |
| **Faceplate:** | None |
| **Backsets:** | Any |

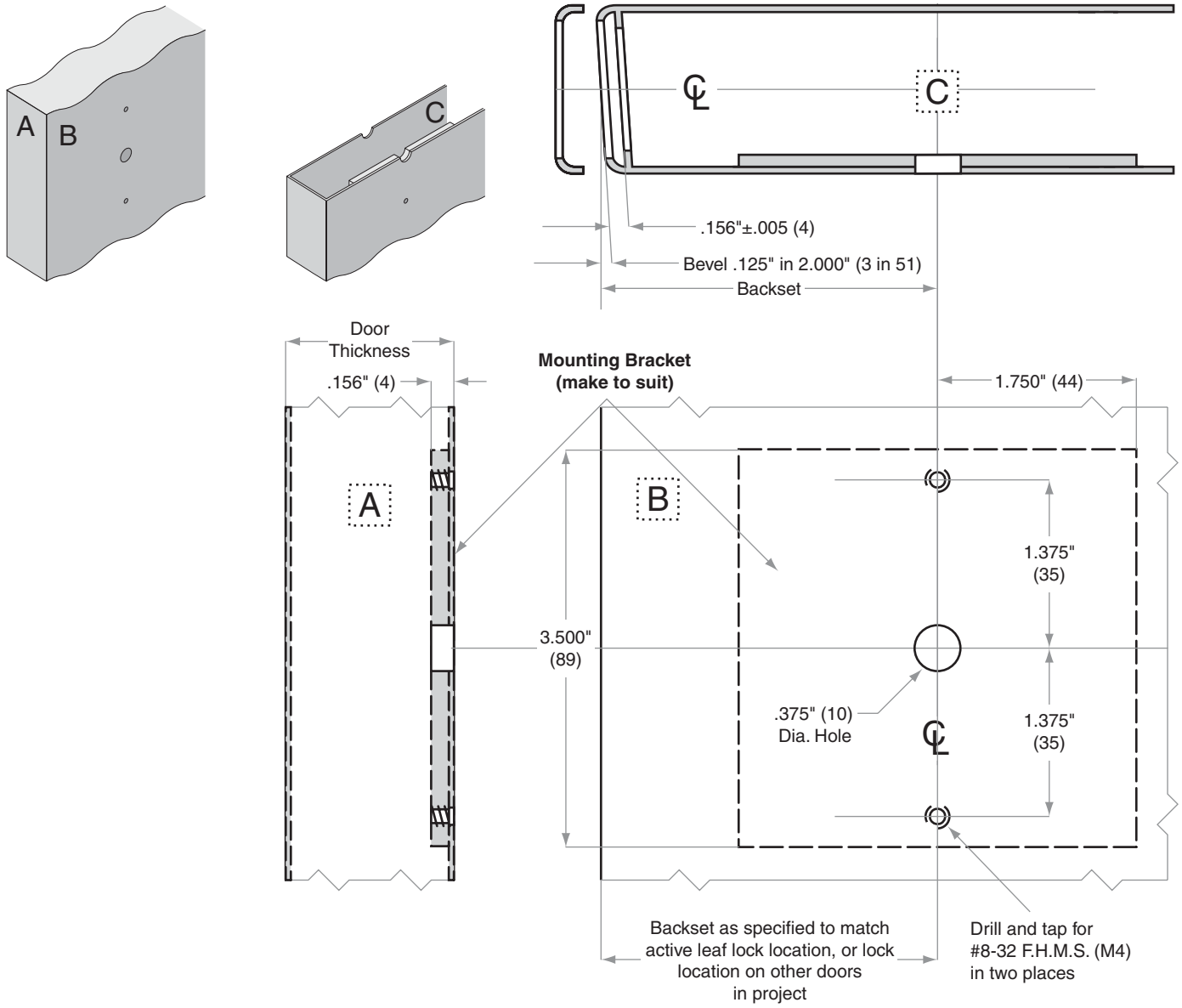


Dimensions shown in parentheses () are in millimeters

**Job:** _____

**Date:** _____

**Door Thickness:** _____

**Remarks:** _____

**TEMPLATE**
**ND404**